Vision Datum

LEO Series Area Scan Cameras

LEO 640P-815um/uc

- VGA resolution @814.5 fps
- USB 3.0 interface with plug and play capability， USB3.0 power supply
- Followed USB3 Vision international standard agreenment,smoothly docking with third-party platforms.
- Support Windows、Linux、Arm and RaspberryPi
- Up to 128 MB local memory for burst transmission and retransmission

Applied range • Defect Detection • Surface Patch Detection • Visual Positioning • Size Measuring • QR Code Reading • VR/AR • Logistics

Camera	LEO 640P-815um/uc
Resolution [H*V]	640 × 480
Sensor	ON Semiconductor PYTHON 300
Sensor Size	1/4”
Sensor Tecchnology	Global, CMOS
Pixel Pize [μm]	4.8 × 4.8
Rrame Rate [fps]	814.5
Data Bit	8bit / 10bit / 12bit
Exposure Time	40μs~10s
Dynamic Range	60dB
Mono/Color	Mono/Color
Image Format	Monochrome： Mono8/10/10p/12/12p Color： Mono 8/10/12 Bayer RG 8/10/10p/12/12p, YUV422Packed,YUV422_YUYV_Packed,RGB 8， BGR 8
Interface	USB 3.0
Synchronization	Via hardware trigger、software trigger or free run mode
Programmable Control [ISP]	Image resolution、RGB gain、Exposure time、Contrast ratio、Gamma form、Image rollovers、Raw、 LUT、Black level correction
Housing Size [l*w*h]	29.0 mm × 29.0 mm × 30.0 mm (55g)
Operating Temperature	-30~70 ° C (Storage), 0~50° C (Working)
Lenses Mount	C-Mount
Digital I/O	Opto-isolated input x 1, opto-isolated output x 1, and bi-directional custom non-isolated I/O x 1
Power Input	DC 5-15V, Supporting USB
Power Consumption	12V @3.2W
Driver	LEO Series Camera Software Suite or 3rd party USB3 Vision Software
Operating System	Windows,Linux,Arm
Conformity	USB3 Vision,GenICam

Spectral Response

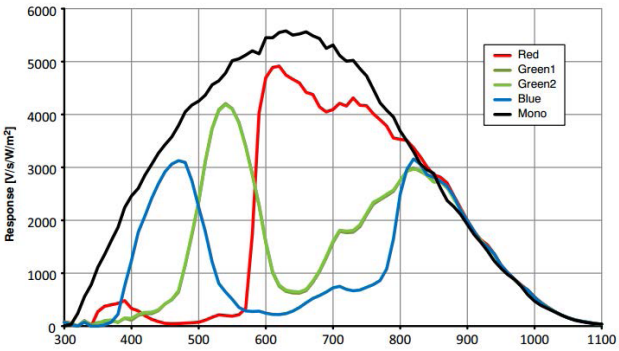

Dimensions

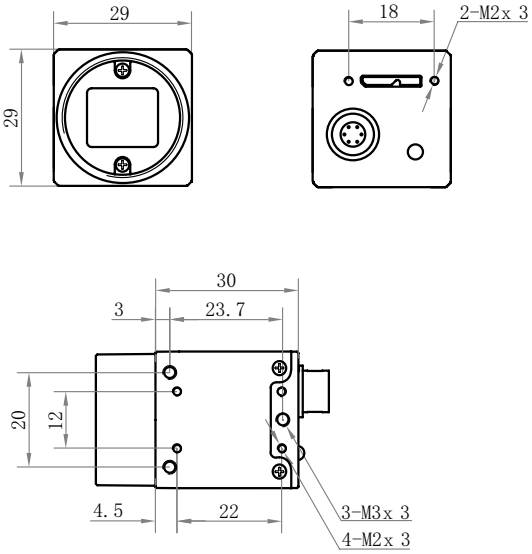

No.8, Xiyuan 9th Road West Lake District, Hangzhou 310030 China
Tel: 86-571-86888309, 86-571-86888307
Web: www.visiondatum.com Email: market@visiondatum.com